Bracket

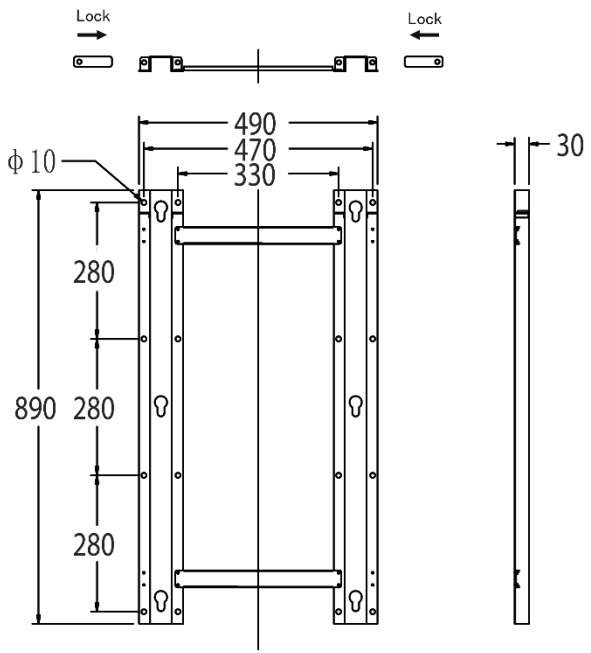

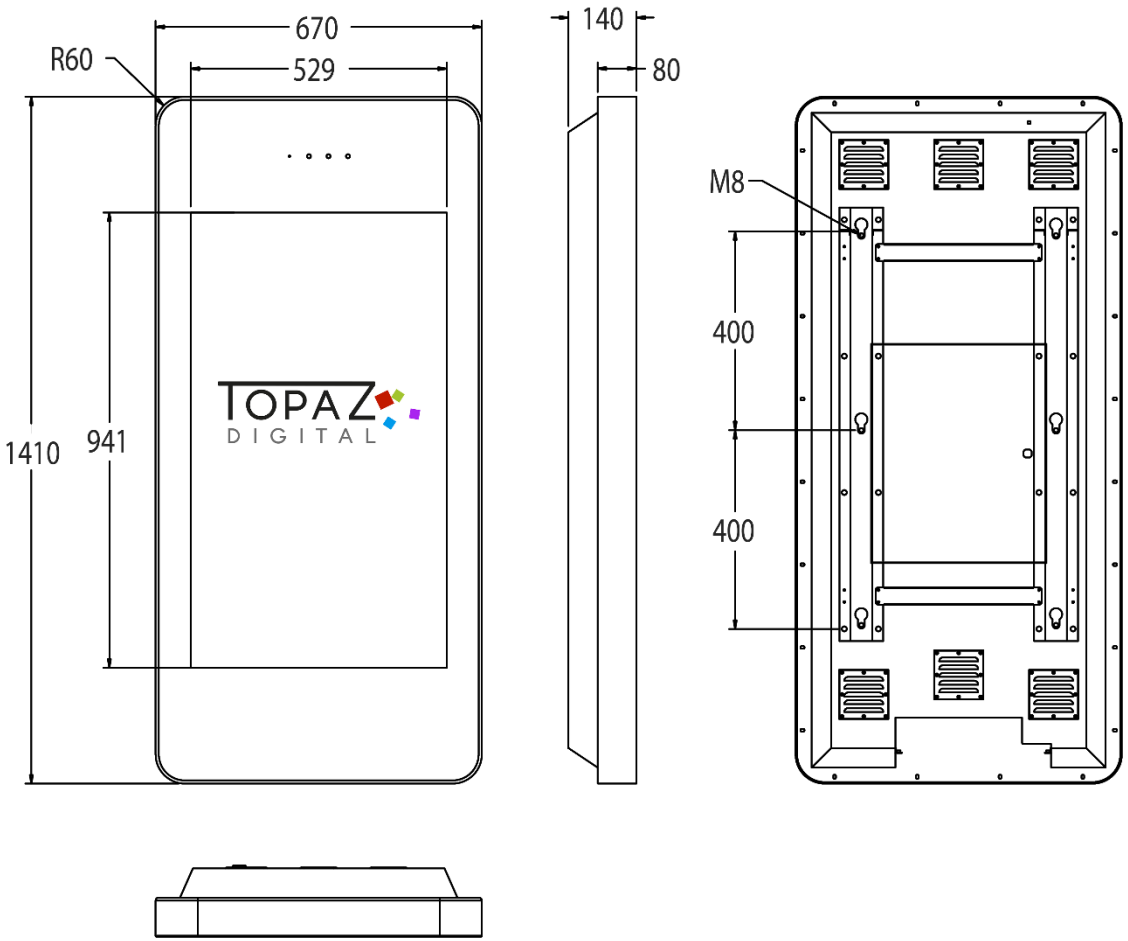

©2022 TOPAZ DIGITAL - E&OE - V2.0